MANUFACTURING SCIENCE AND ENGINEERING — 1997

MED-Vol. 6-1

VOLUME 1

- Sensor-Fused Intelligent Machining Systems
- Quality of Traditionally and Nontraditionally Machined Surfaces: Modeling, Analysis, and Measurement
- Automatic Deburring and Finishing Methods: Nontraditional and Traditional Processes
- Process Sensoring, Monitoring, Modeling and Verification in Electronic Packaging
- New Concepts in Manufacturing Engineering Education

Editor
G. J. Wiens

Contributing editors

Y. Altintas
R. J. Furness
W. J. Endres
V. Chandrasekharan
F. A. Reed
C.-P. Yeh
S. Liu
A. J. Rafanelli
C. Sahay
K. Subramanian
E. Kannatey-Asibu, Jr.
V. P. Astakhov
P. Subramany
S. Melkote
S. M. Athavale
B. Zhang
J. D. Drescher
G. Rizzoni
D. Agonafer

1997 ASME INTERNATIONAL MECHANICAL ENGINEERING CONGRESS AND EXPOSITION

MED-Vol. 6-1

MANUFACTURING SCIENCE AND ENGINEERING 1997

VOLUME 1

- SENSOR-FUSED INTELLIGENT MACHINING SYSTEMS
- QUALITY OF TRADITIONALLY AND NONTRADITIONALLY MACHINED SURFACES: MODELING, ANALYSIS, AND MEASUREMENT
- AUTOMATIC DEBURRING AND FINISHING METHODS: NONTRADITIONAL AND TRADITIONAL PROCESSES
- PROCESS SENSORING, MONITORING, MODELING AND VERIFICATION IN ELECTRONIC PACKAGING
- NEW CONCEPTS IN MANUFACTURING ENGINEERING EDUCATION

presented at

THE 1997 ASME INTERNATIONAL MECHANICAL ENGINEERING CONGRESS AND EXPOSITION
NOVEMBER 16- 21, 1997
DALLAS, TEXAS

sponsored by

THE MANUFACTURING ENGINEERING DIVISION, ASME

co-sponsored by

THE DYNAMIC SYSTEMS AND CONTROL DIVISION, ASME
THE ELECTRICAL AND ELECTRONIC PACKAGING DIVISION, ASME

principal editor

GLORIA J. WIENS
UNIVERSITY OF FLORIDA

contributing editors

Y. ALTINTAS
R. J. FURNESS
W. J. ENDRES
V. CHANDRASEKHARAN
G. J. WIENS
F. A REED
C.-P. YEH
S. LIU
A. J. RAFANELLI
C. SAHAY
K. SUBRAMANIAN
E. KANNATEY-ASIBU, JR.
V. P. ASTAKHOV
P. SUBRAMANY
S. MELKOTE
S. M. ATHAVALE
B. ZHANG
J. D. DRESCHER
G. RIZZONI
D. AGONAFER

THE AMERICAN SOCIETY OF MECHANICAL ENGINEERS
United Engineering Center / 345 East 47th Street / New York, N.Y. 10017

Statement from By-Laws: The Society shall not be responsible for statements or opinions advanced in papers. . .or printed in its publications (7.1.3)

Authorization to photocopy for internal or personal use is granted to libraries and other users registered with the Copyright Clearance Center (CCC) provided 3$/article of $4/page is paid to CCC, 222 Rosewood Dr., Danvers, MA 01923. Requests for special permission or bulk reproduction should be addressed to the ASME Technical Publishing Department.

ISBN No. 0-7918-1849-7

Copyright © 1997 by
THE AMERICAN SOCIETY OF MECHANICAL ENGINEERS
All Rights Reserved
Printed in U.S.A.

CONTENTS

SENSOR FUSED INTELLIGENT MACHINING SYSTEMS

Introduction
Yusuf Altintas and Richard J. Furness 1

An Entropy-Based Index Evaluation Scheme for Multiple Sensor Fusion in Classification Process
Yubao Chen and Elsayed Orady 3

A Multi-Purpose Laser Sensor for Cutting Tools
Oleg Ryabov, Kazuo Mori, and Nagayoshi Kasashima 9

Open Architecture Modular Tool Kit for Motion and Machining Process Control
N. A. Erol and Y. Altintas 15

A Thermomechanical Model of Machine Tool Spindles for Use in the Design of Reconfigurable Angular Contact Spindle Bearing Load Control Systems
Alex O. Gibson, Jeffrey L. Stein, and Jay F. Tu 23

Integrated Digitizing, Path Planning, and Five-Axis Machining for the Refurbishment of Compressor and Turbine Blades
Robert V. Fleisig and Allan D. Spence 31

PC Based Open Architecture Machine Tool Control
T. E. Bailey, D. D. A. Renton, and M. A. Elbestawi 39

Online Estimation of Surface Roughness by Recurrent Fuzzy Inference in Grinding Process
Futoshi Kobayashi, Fumihito Arai, Toshio Fukuda, Makoto Onoda, and Norimasa Marui 49

Prediction of Quasistatic Errors in Three-Axis CNC Machining Centers
Xiong-Biao Chen and Aseervadam Geddam 55

Application Specific Calibration of AE Sensors for Machining Monitoring
W. Hundt and C. Scheer 63

Dynamic Measurement of CNC Part Paths
Tony L. Schmitz and John C. Ziegert 69

Monitoring Technology for Achieving Intelligent Grinding Systems
Ichiro Inasaki 75

Flexible Monitoring Strategies for Milling Operations
Fritz Klocke, Martin Reuber, and Michael Rehse 83

Designing Applications for an OSACA Control
Wolfgang Sperling and Peter Lutz 91

Intelligent Process Monitoring for Rough Milling Operations Based on Digital Drive Currents and Machine Integrated Sensors
Michael Kaever and Manfred Weck 97

Active Structural Control of Vertical Turning Lathe Vibrations
John E. Miesner, Reza Ghanadan, and Stephen D. O'Regan 105

A New Electromagnetic Contact Sensing Technique for Enhancing Machining Accuracy
V. A. Ostafiev and Patri K. Venuvinod 113

Prediction of Shear Angle in Oblique Cutting With Maximum Shear Stress and Minimum Energy Principles
Eiji Shamoto and Yusuf Altintas 121

Development of a Magnetostrictive Torque Sensor for Milling Process Monitoring
Hiro Ohzeki, Akihiro Mashine, Hideki Aoyama, and Ichiro Inasaki 129

Prediction of Thermal Deformation of Machine Tool With Strain Sensor
Toshimichi Moriwaki, Eiji Shamoto, and Masahiro Kawano 137

QUALITY OF TRADITIONALLY AND NONTRADITIONALLY MACHINED SURFACES: MODELING, ANALYSIS AND MEASUREMENT

Introduction
William J. Endres and Vivek Chandrasekharan 143
A Statistical Study of Factors Affecting Surface Finish in Five-Axis Machining
Keith A. White, C. Greg Jensen, Chuck Helquist, and Troy Smalley 145
Modeling Texture of Peripheral-Milled Surfaces Using a Neural Network and Fractal Method With Evidence of Chaos
G. A. Stark and K. S. Moon 153
Feasible Machining Strip Evaluation for 5-Axis CNC Die and Mold Machining
Yuan-Shin Lee and Hong Ji 161
Automatic 5-Axis CNC Feedrate Selection via Discrete Mechanistic and Geometric Model Integration
Jeffrey G. Hemmett, Barry K. Fussell, and Robert B. Jerard 173
Improving the Accuracy of Machined Parametric Surfaces Using Cutting Force Synthesis and Surface Offset Techniques
Mohamed A. E. Gadalla and Waguih H. ElMaraghy 181
Experimental Investigation of Tapped Thread Surface Roughness for Cast Aluminum Alloys
Tengyun Cao, Stephen A. Batzer, and John W. Sutherland 189
Experimental Study of the Pre-Stressing Capability Through Residual Stress Generation in Superfinish Machining of Hardened Steel
C. R. Liu and S. R. Agha 197
Improving the Accuracy of Microscopic Laser Interferometry System for Precision Surface Measurement by Integrated Scanning Motions
Kee S. Moon and Yiding Wang 209
Accurate Assessment of Flatness Tolerance Using Direct Search Optimization
Sampath Damodarasamy and Sam Anand 217
Mechanics of Polishing
Vispi H. Bulsara, Srinivasan Chandrasekar, Yoomin Ahn, and Thomas N. Farris 225
Residual Stresses and Workpiece Deformation Due to Polishing and Plating of Computer Hard Disk Substrates
Barney E. Klamecki 235
Microstructural Effects on the Machining Performance of Dental Ceramics
D. T. Le, Lixun Qi, Guangming Zhang, and Stanley J. Ng 245
A Dynamic Model for Bound Abrasive Grinding of Optical Materials: The Effect of Grinding Conditions on the Workpiece Surface Quality
Toshio Takahashi and Paul D. Funkenbusch 253

AUTOMATIC DEBURRING AND FINISHING METHODS: NONTRADITIONAL AND TRADITIONAL PROCESSES

Introduction
Gloria Wiens and Frank Reed 261
Current Deburring Methods Used in Industry
LaRoux K. Gillespie 263
A Neural Network Based Interactive Programing of a Deburring Robot in a Virtual Environment
T. Kesavadas and Chin Khor 273
Development of Force-Control Model for Edge-Deburring With Filamentary Brush
Lienjing Chen, Robert J. Stango and Vikram Cariapa 281
Preview Control for Robot Force Control: Experimental Investigation of Edge-Following
Boojoong Yong 293

Striation Formation and Surface Finish in Laser Cutting of Mild Steel
Kai Chen and Y. Lawrence Yao 301
Automated Scarfing and Surface Finishing Apparatus for Curved Composite Structures
Edwin A. Erlbacher and Lester E. Godwin 309
Discharge Quality Estimation and Significant Feature Identification in Micro-Electrical Discharge Machining
R. Ramabhadran, R. R. Hebbar, R. L. Kashyap, and S. Chandrasekar 317

PROCESS SENSORING, MONITORING, MODELING AND VERIFICATION IN ELECTRONIC PACKAGING — PART A
Introduction
Chao-pin Yeh and Sheng Liu 327
Thermal Performance Evaluation of VBGA Packages
Wen C. Zheng, Paul Y. F. Wu, and James J. D. Lan 329
Transient and Steady-State Thermal Design Evaluation of a Carbon Monoxide Gas Sensor Using CFD Tool
Tien-Yu Tom Lee, Ravi Sharma, and Andre Peyre-Lavigne 339
Investigation of the Lead-On-Chip Package's Reliability
P.-H. Tsao, L. C. Chang, T. C. Chen, Chender Haung, and C. Z. Chen 347
On the Equivalent Finite Element Beam Model for Ball Grid Array Analysis
Hsien-Chie Cheng, Kuo-Ning Chiang, and Ming-Hsiao Lee 353
Real Time Monitoring and Simulation of Thermal Deformation in Plastic Package
Jiansen Zhu, Daqing Zou, and Sheng Liu 361
Wafer Surface Measurements Using Shadow Moiré With Talbot Effect
S. Wu, S. Wei, I. Kao, and F. P. Chiang 369
Constitutive Modeling of Polymer Films From Viscoelasticity to Viscoplasticity
Zhengfang Qian, Minfu Lu, and Sheng Liu 377
Two Test Specimens for Determining the Interfacial Fracture Toughness in Flip-Chip Assemblies
Xiantao Yan and Rakesh K. Agarwal 383
Solder Joint Formation Simulation and Component Tombstoning Prediction During Reflow
Xiaohua Wu, Xinyu Dou, Chao-Pin Yeh, and Karl Wyatt 391
Prediction of the Solder Joint Configuration Under Various Geometric Parameters
Wei-Long Chen, Bor-Lin Shyu, and Kuo-Ning Chiang 397
Sequential Processing Mechanics Modeling for a Model IC Package
Jianjun Wang and Sheng Liu 401
Evaluation of Interfacial Fracture Toughness of a Bi-Material System Under Thermal Loading Conditions
Jianjun Wang, Daqing Zou, and Sheng Liu 411
Applications of Digital Correlation Method to Microscopic Strain Measurement and Materials Property Characterization
H. Lu 423

PROCESS SENSORING, MONITORING, MODELING AND VERIFICATION IN ELECTRONIC PACKAGING — PART B
Introduction
C. Sahay and A. J. Rafanelli 429
CBGA Solder Fillet Shape Prediction and Design Optimization
Y. Li and R. L. Mahajan 431

Modeling Stresses of Contacts in Wiresaw Slicing of Polycrystalline and Crystalline Ingots: Application to Silicon Wafer Production
Ji Li, Imin Kao, and Vish Prasad 439
A Review of Changes and Trends Affecting Military Electronics Manufacturing
Anthony J. Rafanelli 447

NEW CONCEPTS IN MANUFACTURING ENGINEERING EDUCATION
Introduction
Elijah Kannatey-Asibu, Jr. and K. (Subbu) Subramanian 453
Multi-Media Developments for a Laser Processing Curriculum
Elijah Kannatey-Asibu, Jr. 455
Interactive Tutorials on Manufacturing Processes Using JAVA™
Barney E. Klamecki 461
Manufacturing Engineering Education Through Industry/University Cooperative Research: Issues, Challenges, and Strategies
Jay Lee 465
Video Based Manufacturing Courses for Electronics
John A. Fillo, Chittaranjan Sahay, and Krishnaswami Srihari 471
Teaching Manufacturing and Design for Manufacturability to Mechanical Engineering Students
Steven M. Nesbit and Jess J. Comer 479
Manufacturing Processes Course With Emphasis on Modeling, Experimentation, and Design
James C. Moller 487

Author Index 493

MED-Vol. 6-1, Manufacturing Science and Technology
Volume 1
ASME 1997

A NEW ELECTROMAGNETIC CONTACT SENSING TECHNIQUE FOR ENHANCING MACHINING ACCURACY

V.A. Ostafiev*, and Patri K. Venuvinod

* Visiting Professor ** Professor and Head
Department of Manufacturing Engineering and Engineering Management
City University of Hong Kong

ABSTRACT

This paper describes a new electromagnetic contact sensing technique called the "Fine Touch" method which enables the cutting tool itself be used as a probe during on-machine measurement of parts. The simple sensor design of the probe (the cutting tool) has resulted in a low co system for workpiece set-up and inspection. Tests have shown that the sensor precision is of the order of 0.01 μm and, hence, could be used coordinate measuring machines (CMM) as well. The sensor is effective irrespective of variations in cutting tool geometry, cutting insert coat insert geometry and size, cutting fluids, and workpiece material.

Keywords: Electromagnetic Sensor, Measurement, Precision.

1. INTRODUCTION

Owing to increasing demand for higher precision coupled with lower costs in the machining industry (Mckeown, 1987)], there is a growing need for automatable techniques leading to enhanced machining accuracy. In response to this demand, much progress has been made in recent times with regard to the development of high precision machine tools and novel machining techniques capable of yielding sub-micron level and, even, nanometer level machining accuracies. However, very few breakthroughs appear to have been made in terms of cost effective techniques capable of significantly enhancing machining accuracies achievable on *commonly used* machine tools (conventional, NC, or otherwise). As a result, the dimensional errors on the parts produced on most industrial machine tools continue to be several times larger in magnitude than the theoretically achievable smallest machining error on the given machine tool. For instance, in recent experiments on a CNC turning center, the maximum error on workpiece diameter was 20 times larger than the resolution of the machine axes (Liu, 1996).

The theoretical upper limit to the achievable machined part accuracy on a machine tool is basically determined by the random error profile of the specific machine. The gap between the actually achieved accuracy and the theoretical limit often arises due to assignable causes such as the errors in workpiece set-up; errors in tool set-up; regular geometric, kinematic and thermal errors inherent within the machine tool; errors due to dimensional wear of the cutting tool; and errors due to the deflection of the machine-fixtu workpiece-tool system under the cutting load. Good machin practice requires these errors due to assignable causes to anticipated and corrected (or compensated for). A prerequisite such anticipation and correction is the availability of cost-effec and robust techniques along with the associated devices measuring the errors. Contact sensing is one such technique.

Contact sensing refers to any technique capable of detecting event of contact between two bodies approaching each other. machining practice, one of the bodies is a probe attached to on the machine's slides (axes) and the other is either a reference su or the workpiece surface.

The contact sensing probe predominantly used in cu industrial practice is the touch-trigger probe which has particularly popular on coordinate measuring machines (CMM recent years, the touch trigger probe has also been used to pe on-machine inspection of machined parts and to assist in too workpiece set up.

A touch-trigger probe is usually mounted on one of the sli the machine and the probe is moved relative to the part measured until the probe-tip establishes contact at the desired on the part surface. Upon contact under continued (slow) r motion of the probe, the probe deflects by a small known a until a pair of electrical contacts are closed. This genera electronic signal (trigger) which informs the CNC controller

machine to register the axis positions of the machine at the moment of contact.

As with any shop floor level instrument, a contact probe should be (i) adequately accurate, (ii) versatile in application, (iii) simple in construction, (iv) inexpensive, and (v) robust and easily maintainable. The touch trigger probes in use today, while being attractive in terms of criteria (i) and (ii), seem to need much improvement in terms of criteria (iii), (iv), and (v).

The present paper describes a new technique of contact probing, called the "Fine Touch" method. The method is capable of yielding a measurement accuracy comparable to that of the best touch trigger probe in use today while being significantly superior in terms of the rest of the criteria. The principle of operation and construction of "Fine Touch" is extremely simple. Unlike with the touch trigger probe, Fine Touch has no time delay between the events of "touching" and "triggering". The technique obviates the need for complex probes such as the commonly used touch trigger probes (Renishaw, 1996) by facilitating the use of the cutting tool itself as a contact-probe (Ostafiev, 1991). This eliminates the need for changing the tool for a probe before workpiece measurements could be made. This unprecedented feature opens up new applications of contact probing.

2. THE FINE TOUCH METHOD OF CONTACT SENSING

Fig. 1 shows the application of a novel contact sensor (USSR patents 1713338 & 1740983 by the first author) on a CNC turning machine. The sensing strategy utilizes the fact that the machine-fixture-workpiece-tool (MFWT) system is invariably subject to an electromagnetic field generated by diverse electromagnetic sources (electric motors, transformers, radio waves, etc.) generally present in a shop floor environment. It is assumed that the MFWT loop is electrically conductive (as is the case generally when machining metals which dominate the machining industry). Thus, when the tool is advanced to touch the workpiece during a probing cycle, the electrically conductive MFWT loop is closed and an electromagnetically induced

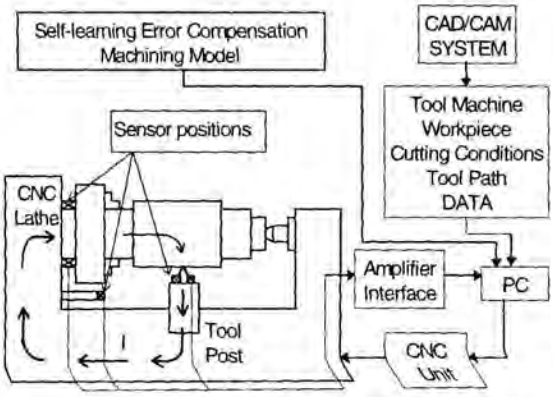

Fig. 1 The application of the electromagnetic contact-probe in CNC turning.

alternating current I with a certain frequency spectrum consistent with that of the ambient electromagnetic field flows around the loop. The presence of this current signals contact between the tool and the workpiece. To detect the presence of this current, a simple electrical coil wound on an electromagnetic toroid (see Fig. 2) is mounted at a convenient location on the machine such that the loop current, I, passes through the central opening in the coil. Experience has shown that it is best to mount the coil in such a manner as to surround the spindle nose of the machine (see Fig. 1). Alternatively, the coil may be mounted to surround the tool shank. However, in this case, the coil needs to be remounted whenever the tool is changed. In either case, the MFWT system acts as a single turn primary winding of a transformer and the detecting coil acts as the secondary winding. The emf., E_m, induced across the detecting coil due to this transformer effect is obviously proportional to the number windings in the detecting coil. A detecting coil with 500 to 1000 turns has been found to provide adequate output after suitable amplification. A separate electric circuit gives an "ON" signal when the amplifier output exceeds a carefully set threshold magnitude. The signaling circuit is easily wired to the controller of the CNC machine tool via a system PC such that the controller registers the axis positions at the instance the "ON" signal appears (as is common while using touch trigger probes). Considerable effort has been put into the fine tuning of the signal processing system — these details are not discussed here to protect the integrity of the patents.

Fig. 3 shows the typical variation of E_m as the gap between the tool and the workpiece decreases, i.e. as the tool approaches the work surface from a distance. As observed from this graph, there is a small but detectable voltage across the detector coil even when there is a small gap of the order of 0.005 to 1000 μm in the MFWT electrical loop. This voltage increases slowly as the gap closes. Thus, by setting a second threshold voltage at a suitable level, a proximity signal could be transmitted to the CNC controller when the gap between the tool and the surface being probed is of the order of 0.1 to 1.0 mm. The controller could slow down the rapidly moving probe upon receiving this signal. Thus, the actual contact could be made at a speed sufficiently small to guarantee high contact detection accuracy.

3. TESTS TO ASSESS THE PERFORMANCE OF THE FINE TOUCH METHOD

Consider now the possible sources of error in the contact detection described above.

It is assumed that either the tool itself or a specially designed probe with a spherical or pyramid pointed tip is being used as the probe. The probe tip (or the tool tip) needs to be pointed in the direction of probing motion so as to avoid uncertainty regarding the exact location of the contact point on the probe surface. However, fortunately, most cutting tools are pointed by nature. Experience shows that a spherical probe tip of 3 to 5 mm diameter is sufficiently pointed to provide adequate contact detection accuracy. A hardened pyramid shaped tip with a corner acting as the probe apex of course is the best.

Further uncertainties may arise with regard to the appropriate level of output threshold, and the influence of the presence of coolant and other contaminants (e.g. rust) on work or probe surfaces.

The rest of this section will describe seven sets of tests which were conducted to assess the effectiveness of the new contact sensing technique in comparison with competing techniques and to determine the sensitivity of measurement to various error sources. Each test measurement was repeated several times (in most cases, more than 30 times) to obtain statistically significant conclusions. The accuracy ranges were determined as the *6-sigma* range (i.e. six times the standard deviation of the measurement sample).

Firstly, in order to assess the best possible accuracy, specially designed probes with a hardened and ground square based half-pyramid-point and a 3 mm. diameter sphere were used. The probe was mounted on a metrological height measuring instrument with 0.2 μm resolution. The thickness of a metrological gage block was first measured using the dial indicator on the instrument. Next, the measurement was repeated with the dial indicator (of 0.2 μm resolution) replaced by the special probe. The measurements were repeated several times to obtain statistically significant conclusions. It was found that there was no significant difference between the accuracy levels achievable by the pyramid point or spherical point probes. Each of these probes yielded a standard deviation of around 0.3 μm which was significantly better than the standard deviation of 0.5 μm observed while using the dial indicator. This showed that the precision achievable through the use of the Fine Touch probe is superior to that achievable by a meteorological dial indicator of 0.2 μm resolution. This also meant that an assessment of the full accuracy potential of Fine Touch required further tests to be performed with an instrument with a smaller resolution than that of the metrological dial indicator.

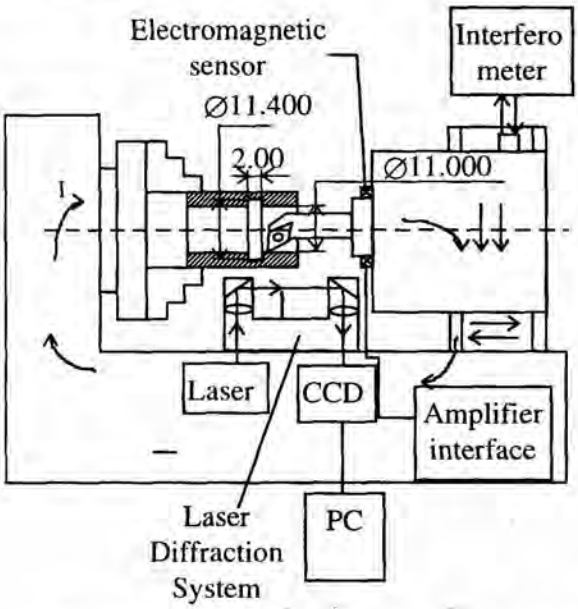

Fig. 4 Electromagnetic sensor calibration setup.

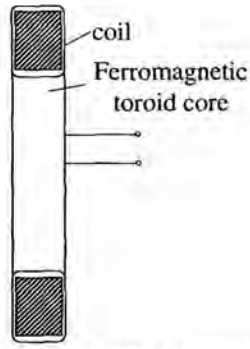

Fig. 2 Detection coil (secondary coil) design.

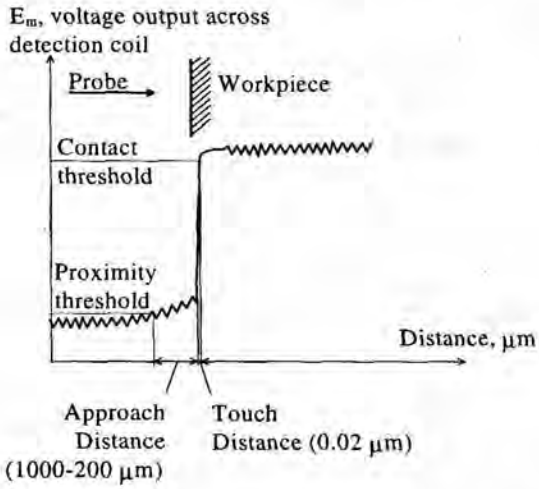

Fig. 3 Variation of voltage output, E_m, across the detection coil as the tool (contact probe) approaches the surface being probed

The second set of tests used a laser interferometer (see Fig. 4). The detection coil was clamped around a standard carbide tipped cutting tool (see Fig. 2) on a precision lathe with a dimensional accuracy capability of ±0.5μm. The lathe provided a numerical display of axis positions for easy positioning of the tool. A previously machined work surface was repeatedly probed (manually) using the cutting tool itself as the contact probe. In each case, the movement of the cutting tool was monitored using a high precision interferometer which, in turn, was set up and calibrated using a laser diffraction system. This elaborate method of monitoring the actual tool position at the time of contact was considered essential to provide a reliable assessment of the full accuracy potential of Fine Touch. These tests were repeated over different combinations (drawn from common practice) of cutting tool materials, cutting tip coatings and geometries work materials, cutting fluids, and work surface conditions. As mentioned earlier, for each combination, the achievable contact detection accuracy was taken as 6 times the standard deviation associated with tool position at the instant of tool-work contact as detected. The following conclusions could be drawn from these tests.

- The best contact detection accuracy (0.011μm) was found with the HSS tool-brass workpiece couple.
- The worst accuracy (0.0125μm) was obtained with a carbide-carbon steel couple.
- The mean contact detection accuracy across the range of tests was equal to 0.012μm .

The third set of tests aimed to compare the performance of the Fine Touch method with that of a popular brand of touch-trigger probe commonly used with a CMM in industrial practice. The test procedure adopted was similar to that used in the first set of tests except for the fact that the measurements were made on a metrological CMM. Measurements obtained with the electromagnetic probe were compared with those obtained using a standard touch-trigger probe. A statistical analysis of the test results indicated that the electromagnetic probe was superior by 2 to 2.5 times in terms of precision.

The aim of the fourth set of tests was to assess the precision obtainable through the use of practical cutting tools themselves as probes in bar turning. The tests were performed on the same precision lathe as used in the second set of tests. Test measurements using the probe were compared with those obtained using a precision dial indicator. Tests were replicated with different tool materials, work materials, cutting fluids (water and oil based) and tool geometries (normal rake angle γ_n = -10° to 45°, normal clearance angle α_n = -3° to 10°, major cutting edge angle ψ_r= -3° to 10°, minor cutting edge angle κ'_r = 10° to 45°, and nose radius r = 0.5 to 5 mm). Other test conditions were essentially same as those used in the second set of tests. All tests yielded a repeatability better than 1 μm. No statistically significant differences were found to be arising from differences in tool geometry and tool materials except for the fact that the standard deviation obtained while probing brass and aluminum workpieces with TiC coated tools was 10-15% higher. The best repeatability was obtained while probing copper and carbon steel workpieces with HSS cutting tools. However, a big error in the range 25-30 μm was found while probing heavily rusted carbon steel workpieces — probably due to the extremely rough work surface. The difference between probing in air and in the presence of cutting fluids was only in the range of 5 to 7%.

The fifth set of tests was aimed at assessing the utility and effectiveness of the Fine Touch method while boring and measuring holes and grooves. These tests also aimed to demonstrate the fact that the machining accuracy achieved in the final pass can be significantly improved by incorporating judicious probing of the surfaces produced in earlier passes with the tool itself acting as the probe. The tests consisted of machining a bore of 11.000 mm diameter with a 0.200 mm deep and 2.000 mm wide rectangular groove in brass workpieces. Machining was performed with standard carbide tipped boring bars on the same precision lathe as used in the second and fourth sets of tests. The following cutting conditions were used: depth of cut 0.05 mm, feed 0.026 mm/rev., and cutting speed 32 m/min. Boring was performed in two equal passes. After the first pass, the boring tip was re-referenced using a laser diffraction system in order to compensate for tool wear and thermal deformation/extension. The resulting bore surface was then contact sensed using the boring tool itself as the probe. The measurement results (see Fig. 5) indicated that the average hole diameter was equal to 10.9773 mm. instead of the planned 10.990 mm. The difference of 0.0127 mm was attributable to the deflection of the boring bar under the cutting load. The planned depth of cut for the second pass was then corrected by this difference. The resulting hole dimensions were then independently measured at 7 angular locations using the contact probing technique, a CMM, and a precision digital hole measuring micrometer. Salient results are presented in Figures 5a and 5b. Taking the CMM measurements as the reference, it is seen that the error in the average bore diameter as determined by the Fine Touch method (1.7 μm) is significantly smaller than that obtained with the use of the precision micrometer (2.7 μm) — see Fig. 5b. Likewise, Fine Touch determined the roundness error to be equal to 0.0056 mm which compared well with the corresponding CMM measurement of 0.0050 mm. Lastly, it was encouraging to note that the deviation between the mean groove diameters determined by Fine Touch and CMM was only 1.6 μm.

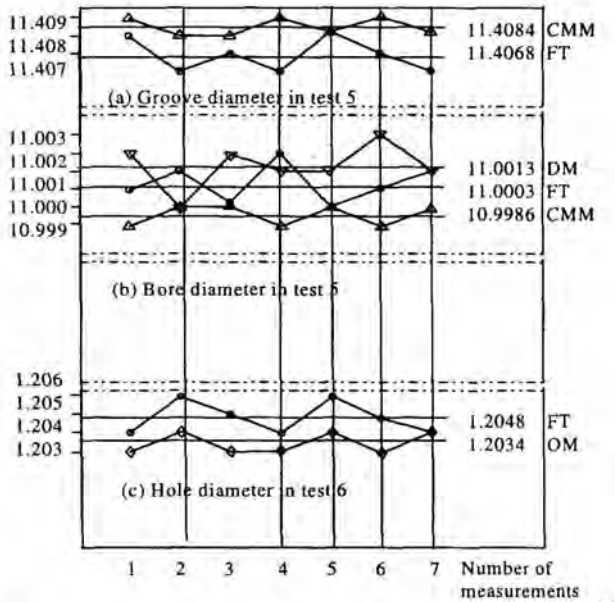

Fine Touch (FT) ∇ digital micrometer (DM)
Δ -CMM ◊-optical microscope (OM)

Fig. 5 Results obtained from the fifth and sixth test sets

The sixth set of tests was aimed at assessing the ability of the Fine Touch strategy in performing on-machine inspection of holes which are too small in diameter to be amenable for inspection by touch-trigger probes. With this aim, a through-drilled hole of 1.00 mm diameter and 3.00 mm length was bored to a diameter 1.200 mm. The lathe and the tool edge referencing technique used were the same as in the fifth test set. The resulting bore diameter was measured using the Fine Touch method as well as independently with a precision optical microscope. Fig. 5c shows the test results. It may be noted that the difference between the two mean measurements is only 1.4 μm.

The aim of the seventh and final set of tests was to assess the effectiveness of the Fine Touch method in performing on-machining inspection on machining centers. For this purpose, pockets of 70 mm width and 80 mm length were milled using a 10 mm diameter end mill on a popular make of 3-axis vertical machining center. The contact detection coil was mounted to surround the end mill so that

the end mill itself could be used as the contact probe while performing on-machine inspection of the pocket. The pocket was then independently inspected using a standard touch-trigger probe mounted on the machine's spindle. Finally, the pocket was inspected on a CMM. It was found that the difference between on-machine measurement by Fine Touch and the corresponding CMM measurement was in the range 0.39 to 0.52 μm. In contrast, the corresponding range noted with on-machine inspection using the standard touch-trigger probe was nearly double in magnitude at 0.5 to 1.1 μm.

4. DISCUSSION OF TEST RESULTS

The following observations may be drawn from the results obtained from the tests described in section 3.

Test set 1

The measurement performance of the Fine Touch is superior to that of a dial indicator of 0.2 μm resolution.

Test sets 2 and 4

The application of the Fine Touch method enables the use of the cutting tool itself as the contact probe in performing on-machine inspection of turned parts. The method is robust and is practically insensitive to the wide variations cutting conditions that are commonly encountered. The method is capable of achieving measurement accuracy of the order of 0.01 μm under shop floor conditions.

Test set 3

The measurement accuracy of the Fine Touch probe is superior by 2 to 2.5 times to that of standard touch-trigger probes under similar working conditions.

Test sets 5 and 7

The Fine Touch method is also applicable in the on-machine inspection of complex parts with pockets, fine bores and grooves. The method is equally applicable on a turning center as well as a machining center. In the context of complex parts inspection, Fine Touch is more conveniently used than touch-trigger probes. The fact that the tool itself could be used as the contact probe opens up new applications of contact probing. For instance, probing of the surfaces generated in the initial passes can produce valuable information which can be used to correct the final pass in order to produce parts of higher precision than otherwise possible. Achieving comparable results with touch-trigger probes is much more inconvenient and tedious if not impossible.

Test set 6

The Fine Touch method enables the on-machine inspection of holes which are too small to be inspected with touch-trigger probes. In principle, any feature that can be machined with a tool with defined cutting edges can also be contact probed with the tool itself acting as the probe.

Table 1
Fine Touch Probing versus Touch-Trigger probing

No.	Criterion	Fine Touch (FT) probing	Touch-Trigger Probing
1	Uni-directional repeatability at stylus tip	0,01- 0.02 μm	0.35-1.00 μm
2	Measurement force	Variable	From 7 to 15 g
3	Distance for workpiece recognition	5 - 1000 μm	Not applicable in most cases
4	Measurement time	10 - 500 μsec	10 μsec
5	Probe approach	Can be recognized	Can't be recognized
6	Maximum extension	300- 750 mm	100-300 mm
7	Stylus velocity	Up to 1000 m/min.	450 -500 mm/min.
8	Cutting tool breakage	Can detect while cutting	Not possible
9	Using the cutting tool as the measurement probe	Possible with an accuracy of 0.01-0.02 μm	Not possible
10	Autonomous action time	1000 hours	80 hours
11	Sensing directions	Limited with regard to the direction normal to the surface being probed	No limit
12	Small hole or groove measurement	Down to 0.3 mm size	Needs to be greater than 2 mm size
13	Pre-travel variation	±0.02 μm	±0.15μm to ± 0.20μm
14	Measurement temperature range	-50 to + 80°C	0 to + 50°C
15	Humidity tolerance	Up to 100%	Up to 100%
16	Material of part to be measured	Needs to be electrically conductive	No restriction
17	Design complexity and maintainability	Extremely simple and easy to maintain	Quite complex and requires careful maintenance

The above observations indicate that the Fine Touch method has many advantages over its main competitor — the method of touch-trigger probing. Hence it is useful to have a comparative overview of the two methods. Table 1 provides such an overview. The information in the column referring to touch-trigger probing is mainly taken from reference Renishaw (1996). The table identifies many advantages of the Fine Touch method. In particular, the Fine Touch method enables the tool itself to be used as the contact probe thus opening up many new applications of contact probing. Note also that Fine Touch can be used to detect tool breakage during cutting.

5. PROBLEMS AND PRECAUTIONARY MEASURES

The following six disadvantages, problems, or precautionary measures associated with the Fine Touch method need to be pointed out:

(i) The method can be applied only when the workpiece and tool are electrically conductive.
(ii) The performance of the tool as a probe may be slightly affected as the tool wears. Firstly, nose wear could, in principle, affect the reliability of output voltage threshold. However, tests have shown that this poses no problem in practice. Secondly, the component of the nose wear in a direction normal to the probed surface will add to the measurement error. Again, tests have shown that, in most cases, this does not become a problem. For the minority of the cases where it does become a problem, there is a simple solution: simply re-calibrate the probe (the worn tool) against the tool-setting surface immediately before executing the probing cycle(s).

(iii) The method requires a finite approach distance during probing.

(iv) It is inevitable that when the cutting tool is used as the contact-probe it will leave a tiny indent on the probed surface. The size of this indent can be reduced by adopting a smaller approach speed upon receiving the proximity signal from the Fine Touch contact detection system. However, it should be remembered that most shop floor CNC machines cannot keep micron-level precision even at the smallest possible axis speed. Further, there is a small but inevitable time lag between the moment of appearance of the proximity signal and the moment of actual stoppage of the axis. Notwithstanding these effects, tests have shown that the tiny indent left by the contact probe on the probed surface is, in most cases, below the acceptable limit. In situations where the size of the indent is beyond the acceptable limit, the user has two options: (a) perform the final inspection on a CMM which can hold significantly superior precision, or (b) use a suitably designed spring-loaded fine touch probe (instead of the cutting tool) in performing on-machine inspection.
(v) One must be aware of the problems resulting from the indiscriminate use of rotating tools or cutters as contact probes. The run-out on these cutters could be between 0.5 to 200 μm under shop floor conditions. The problem is however not serious because the cutter would not be rotating when it is used as the contact probe. Hence, provided the same section of the cutter is used in contacting the work-surface(s) within the inspection cycle for a specific inspection feature, the run-out should have no effect on the measurement accuracy of the feature. If one is aiming at a significantly higher measurement accuracy than is possible by this approach, one may rotate the cutter suitably to utilize the tooth farthest from the cutter axis as the contact-probing section. Note that this latter approach requires manual tool setting.
(vi) The output-voltage threshold used in providing the contact-trigger must be carefully set to ensure robust performance under the inevitable variations that occur in the ambient electromagnetic field as surrounding machines are switched on and off. In fact, much of the development effort associated with the system was directed at this goal. The result is that the system has been found to be fairly robust in practice. The high reliability of the system is partly because the system gives an "ON" signal when the threshold is exceeded, i.e. it does not rely directly on value measurement. For the relatively rare case when fluctuations in the ambient electromagnetic field are too severe, a special elctromagnetic radiation source has been developed. This powerful source is capable of submerging the effects of ambient fluctuations when mounted close to the machine tool being used.

6. ENHANCING MACHINING ACCURACY USING FINE TOUCH

By enabling the tool itself to be used as the contact probe, Fine Touch promotes the increased use of programmed on-machining inspection. This, in turn, will significantly increase the volume of information available for the process planner in improving the machining process from the point of view of part accuracy.

The methods for improving the accuracy of the current part based on the information obtained from the inspection of previously machined or part features are too numerous to be detailed here. The fifth set of tests described in section 3 has summarized one method of improving the accuracy of boring operations. One further method (Liu, 1996) which has been tested in the context of external turning operations is briefly described below.

Liu (1996) aimed to implement a model-based software compensation technique for minimizing dimensional errors in turned parts. Mechanistic models in terms of a set of *a priori* unknown coefficients were developed for the major sources of part dimensional error: error due to machine kinematics, error due to thermal distortion of the machine, error due to machine compliance, and error due to workpiece compliance under the action of the estimated cutting force. The models adopted functions of the spatial coordinates of the point of contact between the tool and the workpiece as the work-surface is traversed. The comprehensive model was then simplified by performing a Pareto classification of error sources. The magnitudes of the coefficients used in the model were however unknown when the first cutting situation of a certain type was encountered. Hence, the first few passes (and/or parts) were taken using the uncompensated part program. The machined surface generated at each stage was probed using the Fine Touch methodology with the tool itself acting as the contact-sensor. The machining errors thus determined were input into the models in order to obtain the first estimates of the previously unknown model coefficients. The errors likely to occur following the next planned pass were then predicted from the error model and the part program was compensated in accordance with the predicted errors. At this stage, it was generally found that the part errors were significantly smaller than those noted in the very first part (pass). The procedure (machine with initial part program → measure part errors at several locations using Fine Touch → refine model coefficients → compensate part program) was then repeated till the errors were reduced to acceptable levels. Thus, in one case, the maximum error on turned diameter was reduced from 80 μm to 4 μm (which was approximately equal to the random error in axis positioning on the machine). It is clear that this procedure could not have been implemented as easily in the absence of a quick and convenient on-machine inspection probe such as the Fine Touch. It is also interesting to note that this methodology provides an environment conducive to 'learning' by the machine. As more instances of a similar cutting situation are encountered, the machine is able to gather greater 'insights' and, thus, becomes progressively 'smarter'.

7. CONCLUSION

A new method of contact sensing for on-machine inspection has been presented and its performance has been compared with that of the presently popular technique of touch-trigger probing. The new technique utilizes a simple electromagnetic induction principle. The method is marginally superior to touch-trigger probing in terms of measurement accuracy and significantly superior in terms of cost, simplicity, robustness, maintainability and versatility of application. The most useful feature of the technique is that it enables the use of the cutting tool itself as the probe. Thus, no time need be wasted in changing the cutting tool with an inspection probe. This feature makes its use much more economical and convenient than the use of touch-trigger probes. Finally, the same feature opens up new applications of contact probing.

ACKNOWLEDGMENTS

The authors are grateful to Ir. V. Scitiouk of Kiev Polytechnic Institute for his personal support and encouragement. They also appreciate the assistance in experimental work provided by their undergraduate project students Mr. Lo Hon Wing, Ms. Law Mo Yin, and research students: Mr. Liu Zhanqiang and Mr. Tsoi Man Kwan.

REFERENCES

Liu, Z., 1996, "Intelligent Integrated Inspection and Compensation System for CNC Turning," Ph.D. Qualifying Report, Dept. of Manufacturing Engineering and Engineering Management, City University of Hong Kong.

Mckeown, P.A., 1987, "The Role of precision engineering in manufacturing of the future," Annals of CIRP, Vol. 36, No. 12, pp. 495-501.

Ostafiev, V.A., Masol, I., Timchik, G., 1991, "Multi-parameters intelligent monitoring system for turning," Proceeding, SME International Conference, Las Vegas, pp. 296-301.

Renishaw, 1996, "Technical specification: Probing for productivity on coordinate measuring machines," 21.