International Conference on Manufacturing Systems and Environment - Looking Towards the 21st Century

Tokyo, May 29 - June 1, 1990

MODERN QUALITY CONTROL IN MANUFACTURING PROCESSES WITH UNIVERSAL PERSONAL COMPUTER INSTRUMENTS AND CCD SENSORS

Prof.Dr.-Ing.habil. Dietrich Hofmann,
Dipl.-Ing. Uwe Kaufmann and
Dipl.-Ing. Heinz Knauer,
Friedrich-Schiller-University Jena, GDR

Prof.Dr. Wladimir Ostafjew,
Dr.-Ing. Grigorij Timtschik and
Dipl.-Ing. Victor Smirnow,
Polytechnical Institute of Kiev, USSR

Prof.Dr. Komyo Kariya and
Assist. Shigeru Takayama,
Ritsumeikan University Kyoto, JAPAN

1. INTRODUCTION

Quality assurance in manufacturing processes over many years has been accomplished by manual acquisition and processing of measuring data in comparison with nominal values in technological working sheets.

Modern methods of computer-aided quality assurance are realized by mechano-optical sensors with electrical output signals, universal personal computers according to international industrial standards and necessary interfaces between computer and sensors /1/,/2/.

For non-contacting objectivated measurements a new CCD-measuring device with laser has been developed /3/.

Aim of the paper is the explanation of new hard- and software modules for intelligent quality measurements INQUAMESS for application in flexibel automated manufacturing processes CIM.

2. MODERN METHODS FOR PRECISION LENGTH MEASUREMENTS

Optical devices for length measurements on the basis of CCD sensors are primarily used for one dimensional measurements of spatial parameters like length, distance, thickness, diameter or shape /1/,/2/.

For length measurements with opto-electronical methods, projection or triangulation methods and recently also

diffraction methods are used (Fig.1) /4/.

For bodies with small diameters ($d < 1.5$ mm) it might be presumed that the object has no third dimension. For bodies with a greater diameter this supposition is not valid due to

- the small contrast between the diffraction lines
- the problems of distance measurements between maxima of diffraction lines
- the measurement errors.

At the Polytechnical Institute of Kiev a new device for [illegible] no-contacting length measurements especially to [illegible] diameters up to $d = 1000$ mm on the basis of diffraction methods has been developed (Fig.2).

Main characteristics of this method in comparison with other methods is the application of a measuring edge and a prism for cylindrical objects (Fig.3).

The cylindrical object is put into the measurement device so that the axis of the object is positioned in the plane of the edge. The coherent light beam falls vertical in the plane (Fig.2). The distance between the object and the edge is determined with the help of the diffraction spectrum.

The diameter d of the object can be calculated by

$$d = l - a$$

l is the length of diameter of the object plus aperture
a aperture clearance.

The total measuring device contains also of a small He-Ne-laser as a source of coherent light and one or more photo detectors or CCD-lines or CCD-matrixes, an optical system and an electronical unit for signal processing and control (Fig.3).

The device (hardware and software) has a resolution of 0.2 µm. The control of the measuring process and the analysis of the measurement data can be accomplished either by a personal computer equiped with special add-in cards or by a separate add-on universal personal computer instrument.

3. UNIVERSAL PERSONAL COMPUTER INSTRUMENTS FOR CONTROLLING OF MEASUREMENT PROCESSES AND ANALYSIS OF MEASUREMENT DATA

For data processing worldwide are personal computers with standardised interfaces (RS-232C, IBM-compatible bus interface) and MS-DOS operating systems are available and used. For measurement data acquisition furthermore thousands of different sensors with electrical and non-electrical input and electrical output are on the market.

For intelligent quality measurements INQUAMESS the

connection of sensors with computers in a very efficient manner may be realized by universal personal computer instruments UPCI /5/,/6/.

An approved universal personal computer instrument INQUAMESS-UPCI 2000 developed by Friedrich-Schiller-University Jena is characterized by (Figs.4 and 5):

1. 12 bit analog-to-digital converter,
2. serial interface RS-232C,
3. single chip microcomputer with EPROM and RAM
4. digital ports
5. 10 modules like
   - INQUAMESS-INDAS 20 for inductive sensors
   - INQUAMESS-INKRAS 30 for incremental sensors
   - INQUAMESS-PIO for digital input-output
   - INQUAMESS-EA 10 for TTL in and out and relays
   - INQUAMESS-CCD 14 for CCD-camera

The module INQUAMESS-CCD 14 (Fig. 6) is used for the connection of up to 4 CCD-lines with 256 pixels each to the INQUAMESS-UPCI. This module gives all necessary control informations to the CCD-lines and organizes the acquisition of measuring data through INQUAMESS-UPCI. It also controls the analog-to-digital-convertion of pixel informations within 100 ns.

The modular structure of hard- and software permits a flexible application of the measuring device in the lower hierarchy levels of modern CAQ-systems.

4. INTELLIGENT QUALITY ASSURANCE THROUGH MEASURING AND CONTROLLING SOFTWARE

The importance of software for computer aided quality assurance is increasing rapidly.

An efficient INQUAMESS software pack (Fig. 7) developed at Friedrich-Schiller-University of Jena can be used for selection and supervision of measuring instruments and for statistical process control /7/.

The software modul INQUAMESS-MEC for selection of measuring instruments is used to select a suitable measuring instrument corresponding to the demanded ISO-quality of a product.

The software module INQUAMESS-MEDAT for supervision of measuring instruments supports the management of measuring and testing instruments of an enterprise and contains standard data and standard procedures for cyclical calibration of measuring instruments.

The software modul INQUAMESS-SPC for statistical process control performs the management of quality data INQUAMESS-QADA as well as random und systematic sampling control

INQUAMESS-ZSP and INQUAMESS-QAL during production processes. It provides quality control within small and big quality control loops.

5. TECHNOLOGICAL EDUCATION BY INTUITIVE EDUCATION METHODS AND LOW-COST COMPUTERS

According to the development of computers and systems many types of CAI have been developed.

They are distinguished roughly by hardware as follows (Fig. 8):

1. Stand alone type: In this type one student and one computer are regarded as an unit. The student learns the educational content by communication with the computer.

2. Classroom type: Many units consisting of students and computers are connected to the system console of each classroom. The student learns the educational content which is send from teacher to each unit through the system console.

3. Local area network type: Many units consisting of students and branch computers are connected to the local area network. The students are learning the educational content which is send to each unit through this network.

4. Host computer assisted network type: The above mentioned three types 1., 2. and 3. are regarded as a local system. Here a large scale host computer controls many local systems. The student learns the educational content which is send through the network or send from the host computer.

In these systems, as the student always face the computer the students and computers are almost coupled in lecture time. The teacher becomes a mere system operator or system [illegible]. The communication between teacher and students in lecture time is interrupted by the computer. From educational standpoint this situation is not very well conditioned.

Therefore an advanced intuitive education system has been developed and tested at Ritsumeikan University Kyoto.

The basis of this system is a well developed communication between teacher, students and computers. This system is characterized by connection of low-cost computers with modern audio visual instruments. This system contains

- a personal unit for the teacher,
- a movable audio visual operating unit including a small handy-type computer which is the same as the students one,
- a personal unit for each student and
- a fixed monitoring equipment in lecture room /8/.

It makes possible a permanent communication between teacher and student along the total lecture time. Additionally the student may use his portable low cost computer in all situations to learn his lessons.

This system may also be used for education of workers in industrial enterprises for continued professional training.

6. CONCLUSIONS

Aim of the paper was the introduction of new methods for non-contacting length measurements and statistical process control in the frame of intelligent quality measurements INQUAMESS, to present new modules of INQUAMESS hardware and software for computer-aided quality assurance CAQ and to discuss new educational methods with computer-aided instructions CAI.

The methods presented are understood as a contribution for zero defect production in computer integrated manufacturing CIM.

7. REFERENCES

/1/ Hofmann, D.: Handbuch Messtechnik und Qualitaetssicherung. (Handbook measurement engineering and quality control). 3.Auflage. Berlin: VEB Verlag Technik 1986

/2/ Hofmann, D.; Kariya, K.: Entwicklungstendenzen der rechnergestuetzten Qualitaetssicherung CAQ für CAD/CAM und CIM. (Development of computer-aided quality assurance CAQ for CAD/CAM and CIM). Feingeraetetechnik, Berlin 36 (1987) 10, S. 435-438

/3/ Mitrofanov, A. S.; Krylov, K. I.; Prokopenko, V. G.: Primenenije laserov v mashinostrojenii i priborostrojenii. (Application of lasers in machine building and instrumentation). Leningrad: Mashinostrojenie 1978

/4/ Merbach, P.: Beruehrungsloses Antasten in der Laengenmesstechnik. (Non-contacting length measurement). Feingeraetetechnik, Berlin 31 (1982) 5, s. 195-201.

/5/ Hofmann, D.: Rechnergestuetzte Qualitaetssicherung. (Computer-aided quality assurance). Berlin: VEB Verlag Technik 1988

/6/ Hofmann, D.; Hufe, A.; Kaufmann, U.; Schmidt, D.: Universelle Personalcomputer-Instrumente zur prozessnahen prueftechnischen Qualitaetssicherung. (Universal personal computer instruments for in-process checking quality assurance). Feingeraetetechnik, Berlin 36 (1987) 11, S.508-510

/7/ Hofmann, D.; Reineck, H.; Kaufmann, U.: Rechnergestuetzte Maschinenfaehigkeitspruefung zur fertigungstechnischen Qualitaetssicherung. (Computer-aided machine capability tests for manufacturing quality assurance).Feingeraetetechnik, Berlin 37 (1988) 2, S. 51-53

/8/ Kariya, K.; Hofmann, D.; Takayama, S.; Reineck H.: The role of computers and software in measurement education. Memoirs of Research Institute of Science and Engineering. Ritsumeikan University, Kyoto, Japan No. 47. 1988. pp.17-33

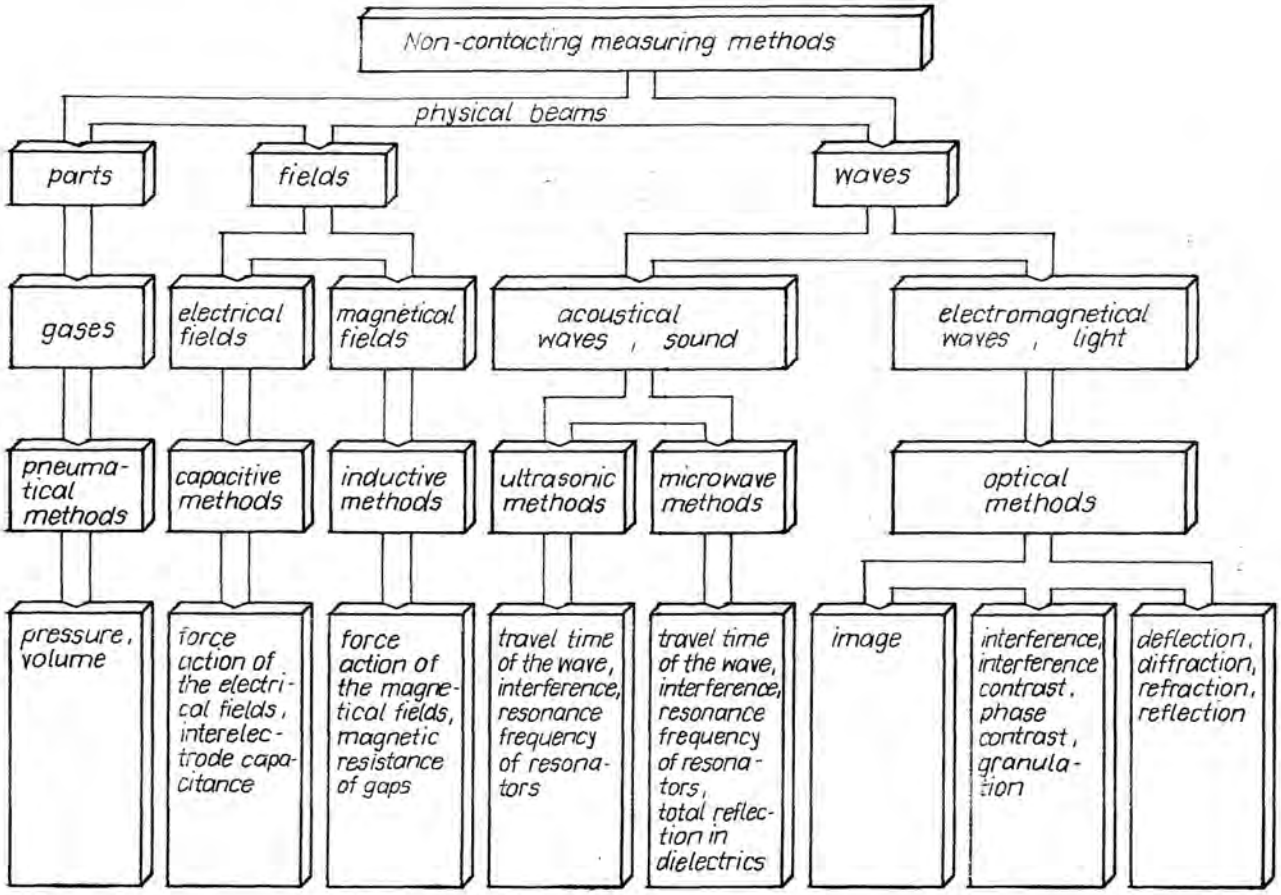

Fig. 1: Non-contacting length measurement

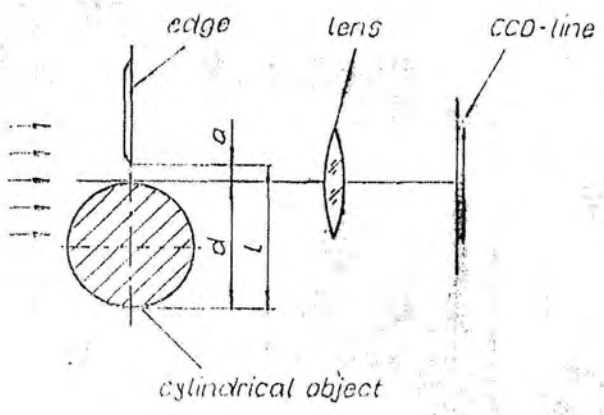

Fig. 2: Optical scheme of CCD measuring device

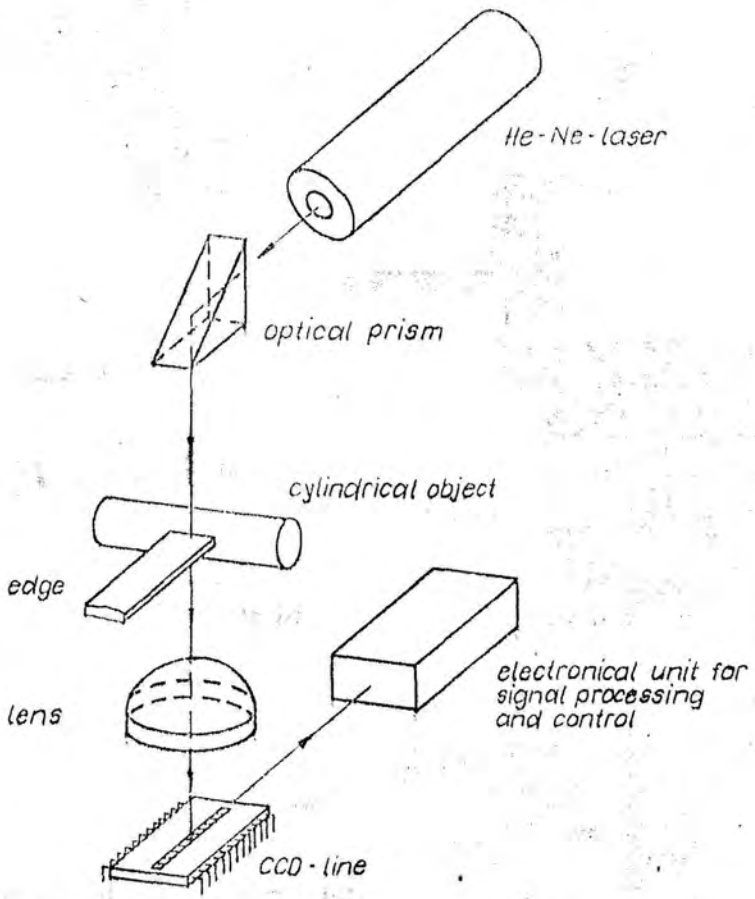

Fig. 3: Construction of CCD measuring device

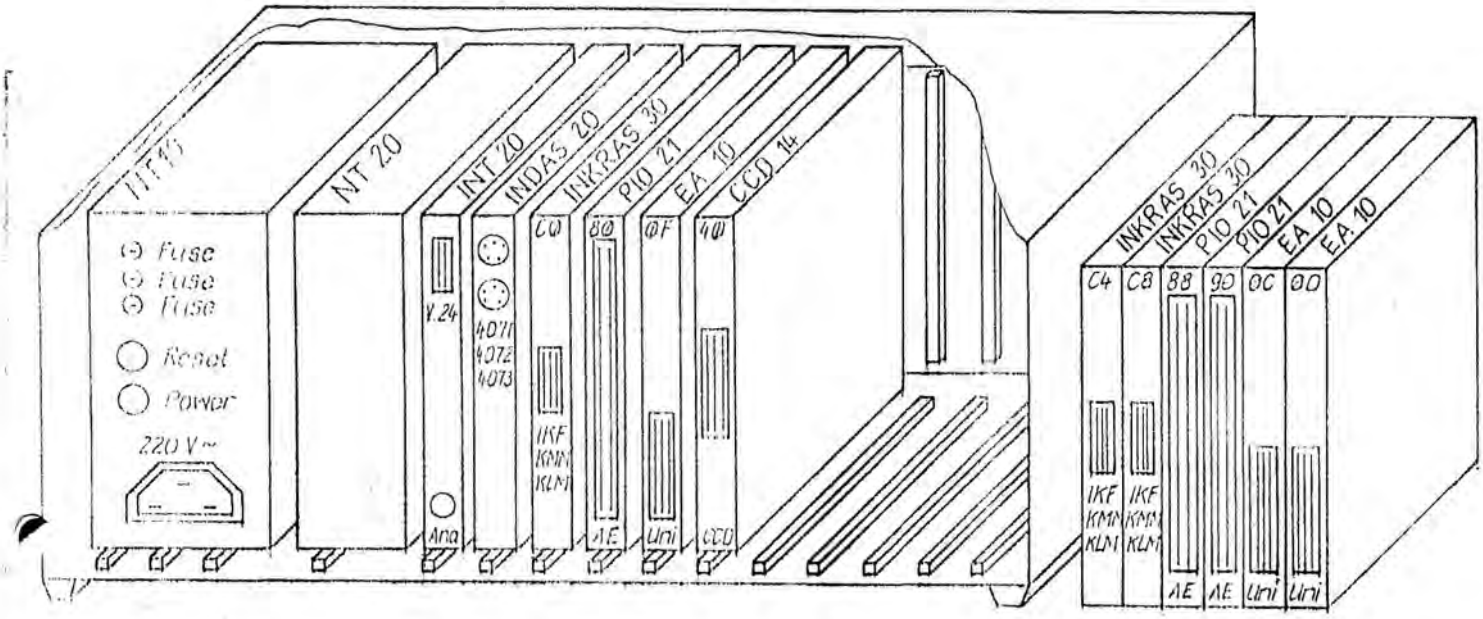

Fig. 4: Universal Personal Computer Instrument INQUAMESS-UPCI 2000 (Hardware)

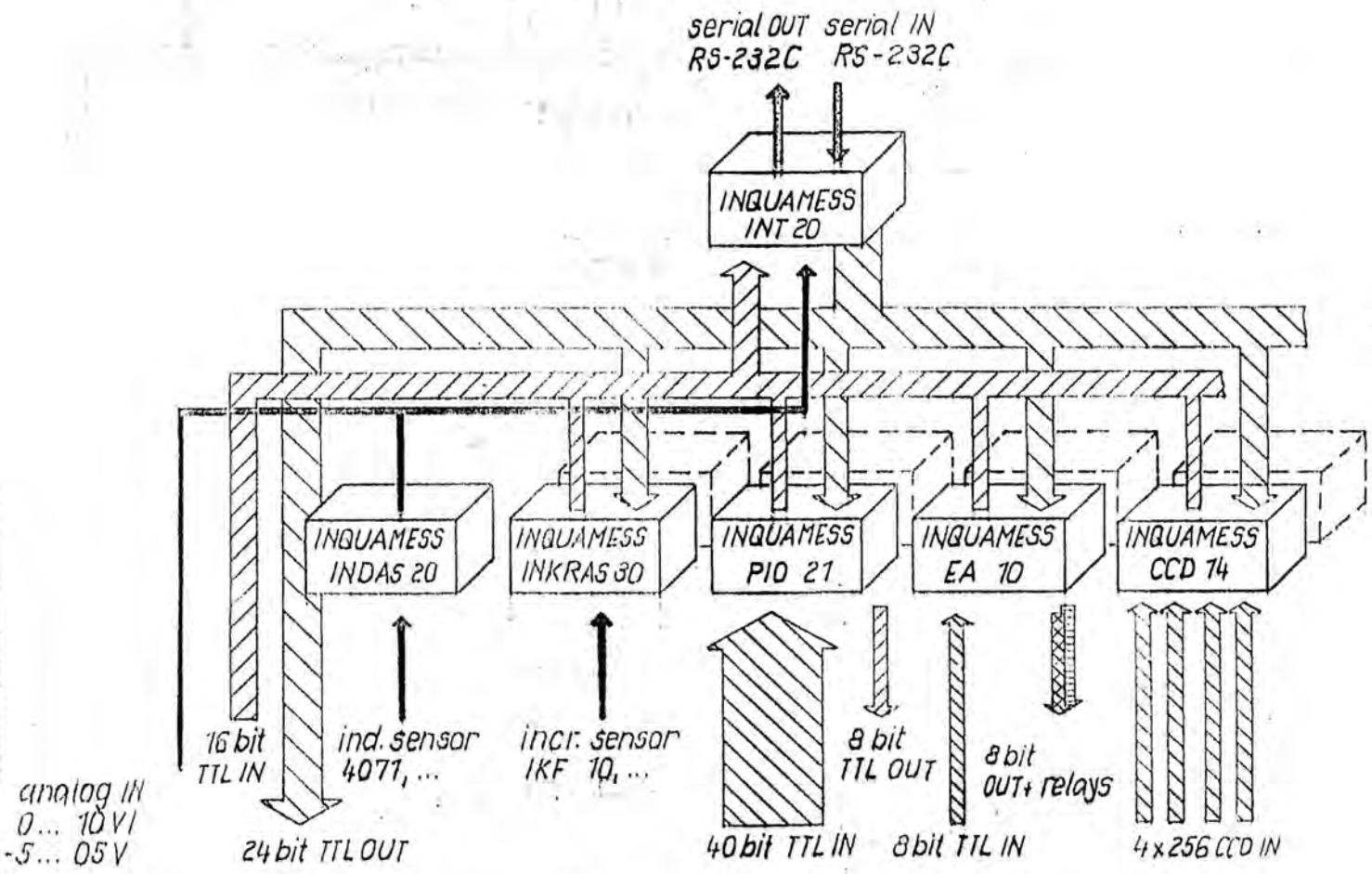

Fig. 5: Universal Personal Computer Instrument INQUAMESS-UPCI 2000 (Signal Processing)

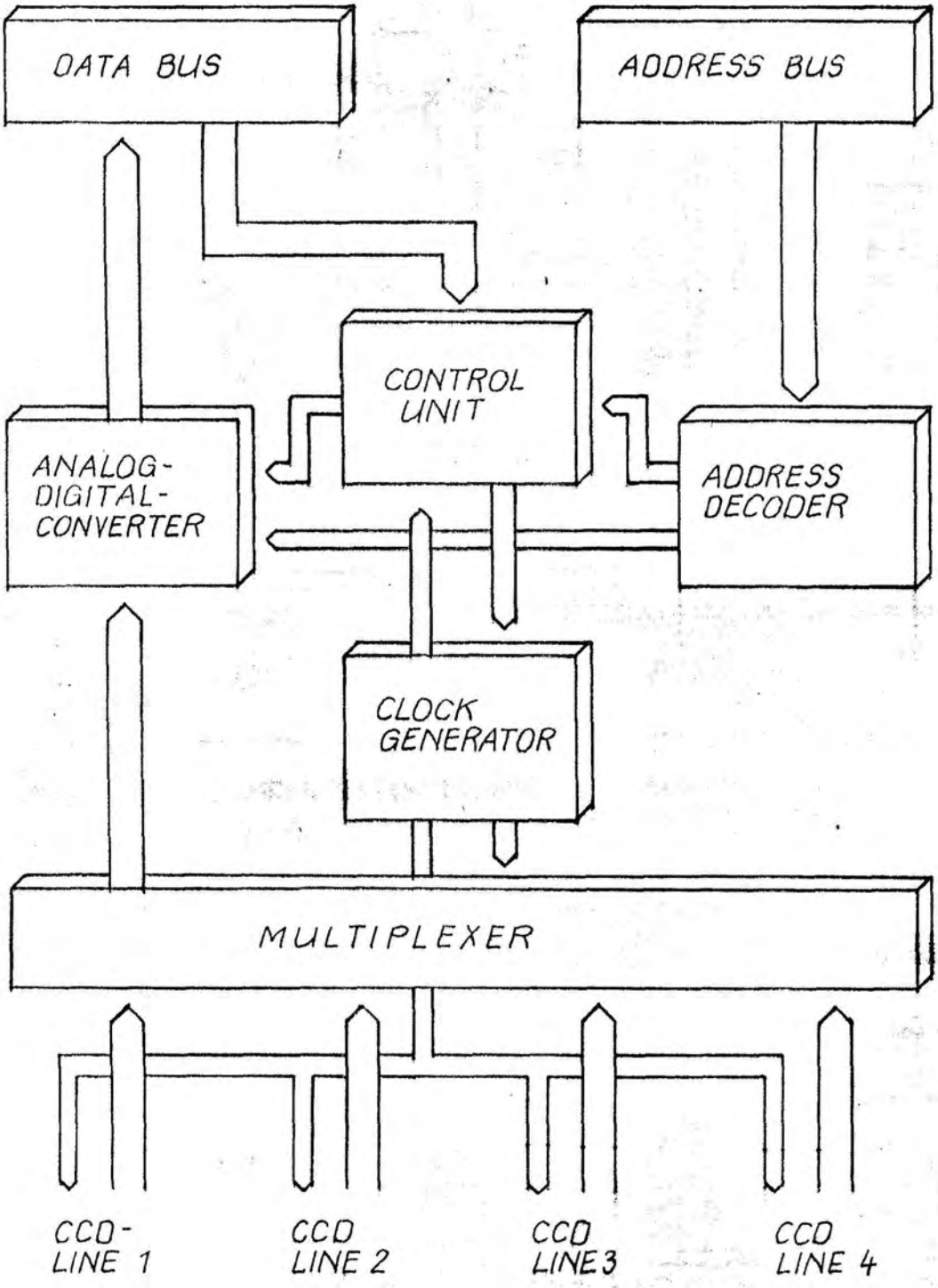

Fig. 6: Configuration of INQUAMESS-CCD 14

INQUAMESS Data Base

measuring instruments | gauges | machine tools

INQUAMESS MEC

INQUAMESS MEUWA

INQUAMESS MEDAT

INQUAMESS QADA

INQUAMESS ZSP

INQUAMESS QAL (Ford Q 101)

INQUAMESS UPCI 2000

INQUAMESS UPCI 2000

INQUAMESS UPCI 2000

INQUAMESS UPCI 2000

Manufacturing process

Fig. 7: INQUAMESS Hardware and Software Pack

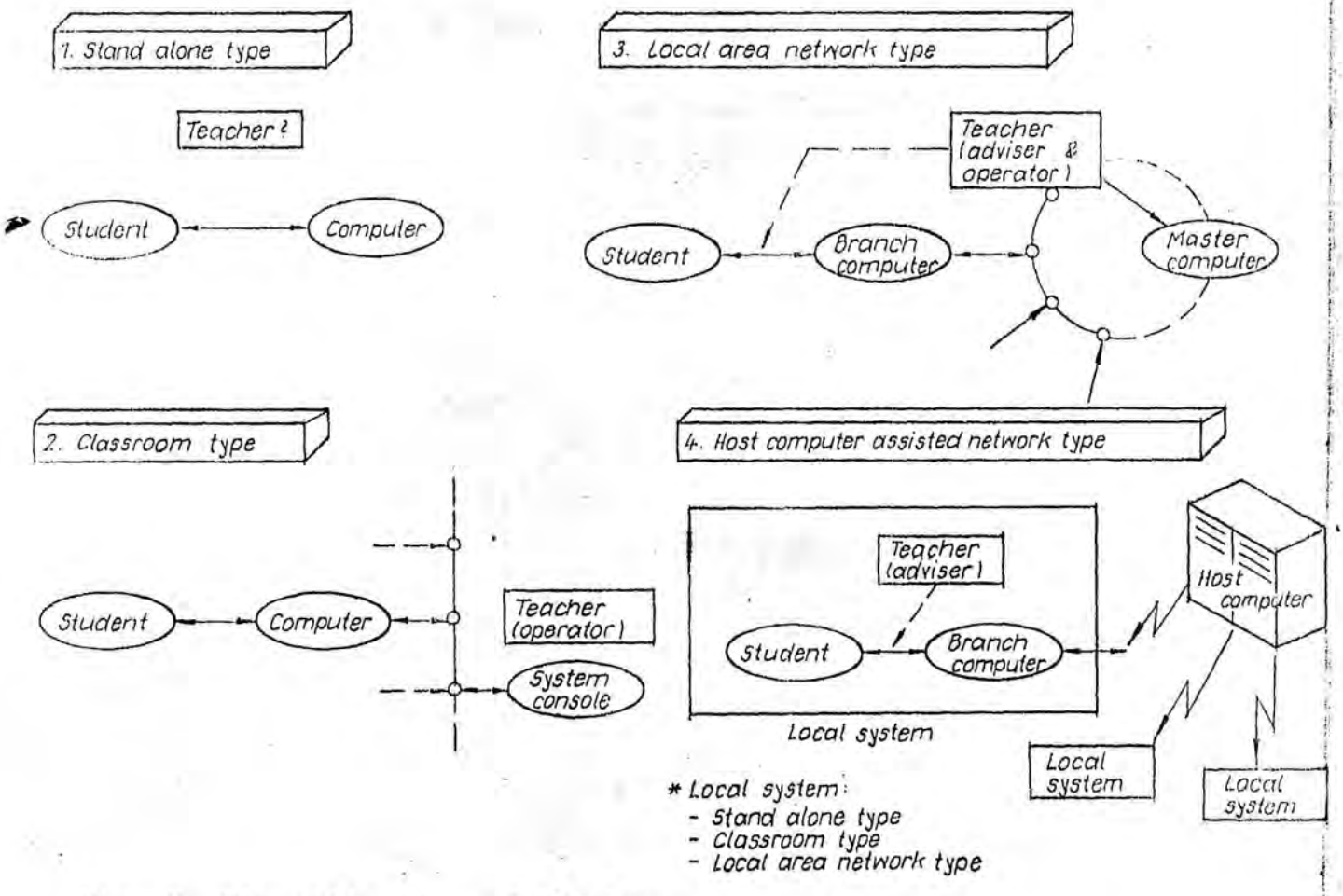

Fig. 8: Classification of CAI Types